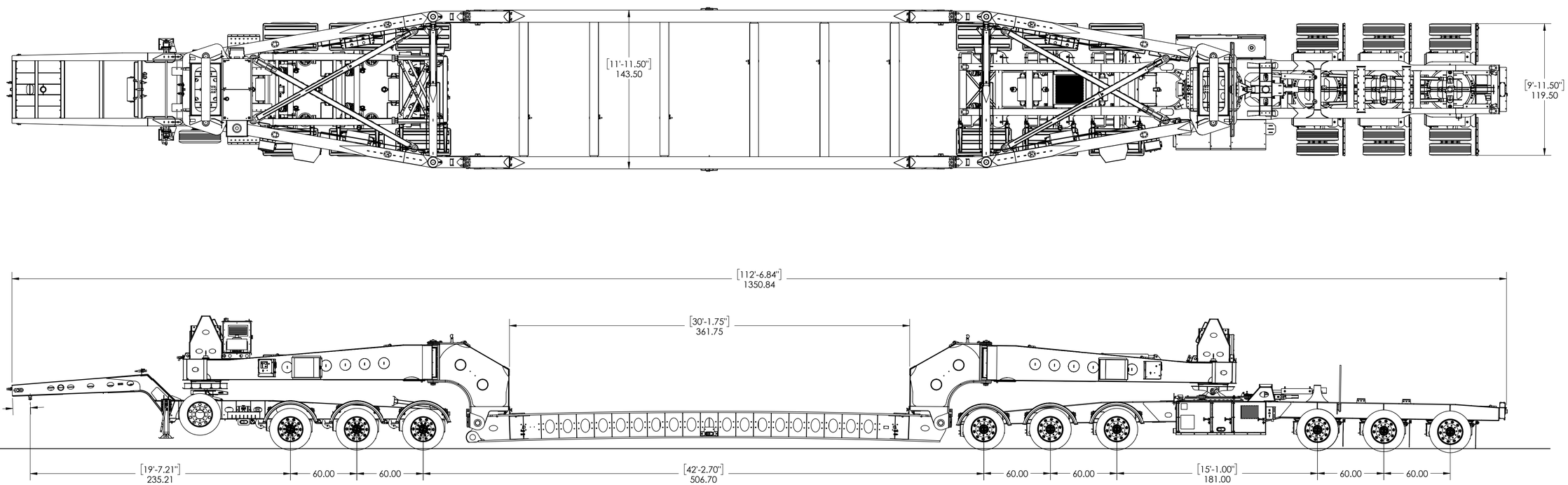

-A 13-AXLE LAYOUT w/ 30' BASE BEAMS

LASER & BRAKE TOLERANCES U.O.N.
ALL LASER DIMS =TOL +/-.03"
ALL BRAKE DIMS = TOL +/- .03
ALL RADII & CORNERS = .10"
ALL BEND ANGLES = 90° W/ INSIDE RADII = TO MATL THK
ALL BEND ANGLES = TOL +/- 1°

FABRICATION TOLERANCES U.O.N.
DIMENSIONAL = TO CLOSEST .06" W/ TOL OF +/-.06"
ANGULAR = +/- 1.00°

MACHINING TOLERANCES U.O.N.
DIMENSIONAL = +/- 0.03
ANGULAR = +/- 0.50°

MASTER™ SOLUTIONS INC.

MFG - P.O. BOX 4444, 20 WOLF BRIDGE RD
CARLISLE, PA 17013
PHONE: 717-243-6849 FAX: 717-243-8021
www.transmastertrailers.com

TRANSMASTER™ TRAILERS

EQUIPMENT TO MOVE YOU FORWARD.

PROPRIETARY AND CONFIDENTIAL

THIS DRAWING ALONG WITH THE DESIGNS AND CONCEPTS DISPLAYED THEREIN ARE THE PROPERTY OF MASTER SOLUTIONS, INC AND SHALL BE RETURNED UPON REQUEST. DO NOT COPY THIS DRAWING OR SHARE THE INFORMATION CONTAINED THEREIN WITHOUT THE WRITTEN CONSENT OF MASTER SOLUTIONS, INC.

LTR	DATE	BY	REVISION
-	-	-	-

JOB		TRANSMASTER TRAILER SALES	
WORK ORDER		51378	
TITLE		13-AXLE	
TOTAL QUANTITY		0	
QTY PER MACHINE		0	
DATE	10/21/2020	DRAWN BY	S. FEDDER
PAGE	1 OF 2	DESTINATION	N/A
DRAWING		**190136-000A**	

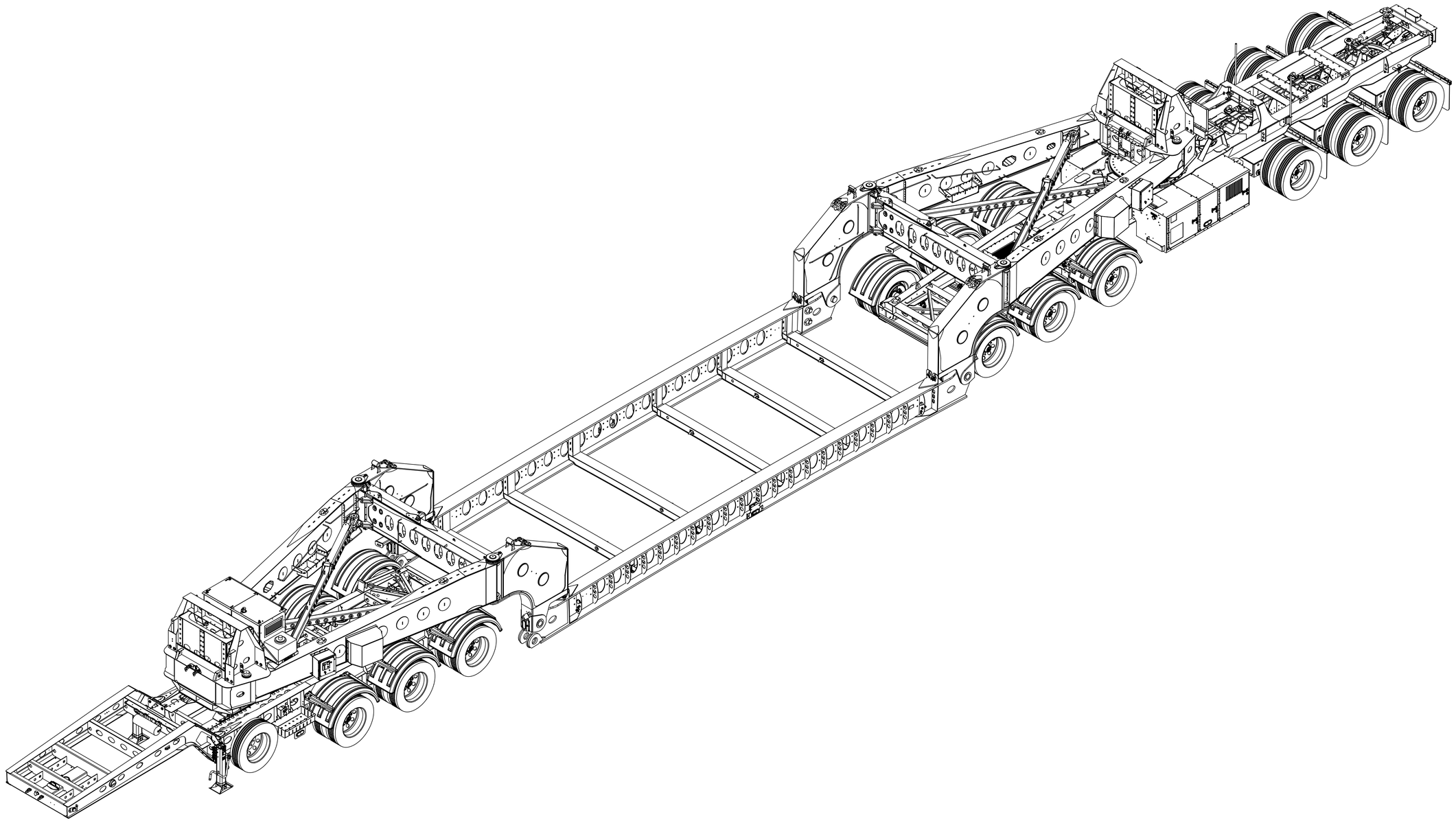

LASER & BRAKE TOLERANCES U.O.N.
ALL LASER DIMS =TOL +/-.03"
ALL BRAKE DIMS = TOL +/- .03
ALL RADII & CORNERS = .10"
ALL BEND ANGLES = 90° W/ INSIDE RADII = TO MATL THK
ALL BEND ANGLES = TOL +/- 1°

FABRICATION TOLERANCES U.O.N.
DIMENSIONAL = TO CLOSEST .06" W/ TOL OF +/-.06"
ANGULAR = +/- 1.00°

MACHINING TOLERANCES U.O.N.
DIMENSIONAL = +/- 0.03
ANGULAR = +/- 0.50°

MASTER™ SOLUTIONS INC.

MFG - P.O. BOX 4444, 20 WOLF BRIDGE RD
CARLISLE, PA 17013
PHONE: 717-243-6849 FAX: 717-243-8021
www.transmastertrailers.com

TRANSMASTER™ TRAILERS

EQUIPMENT TO MOVE YOU FORWARD.

PROPRIETARY AND CONFIDENTIAL

THIS DRAWING ALONG WITH THE DESIGNS AND CONCEPTS DISPLAYED THEREIN ARE THE PROPERTY OF MASTER SOLUTIONS, INC AND SHALL BE RETURNED UPON REQUEST. DO NOT COPY THIS DRAWING OR SHARE THE INFORMATION CONTAINED THEREIN WITHOUT THE WRITTEN CONSENT OF MASTER SOLUTIONS, INC.

LTR	DATE	BY	REVISION
-	-	-	-

JOB		TRANSMASTER TRAILER SALES	
WORK ORDER		51378	
TITLE		13-AXLE	
TOTAL QUANTITY		0	
QTY PER MACHINE		0	
DATE	10/21/2020	DRAWN BY	S. FEDDER
PAGE	2 OF 2	DESTINATION	N/A
DRAWING		**190136-000A**	